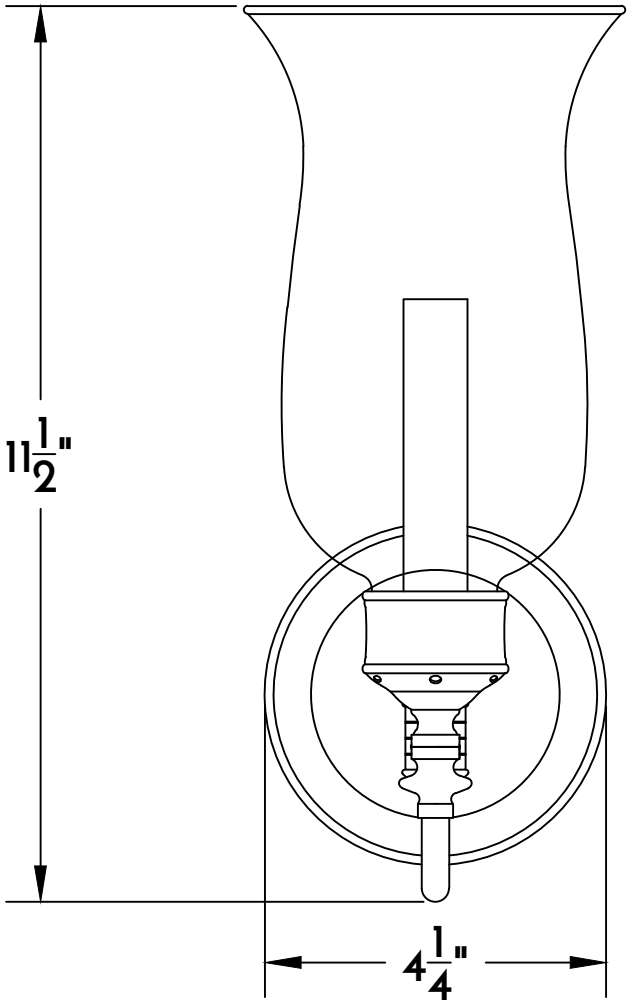

1 SCONCE FRONT VIEW

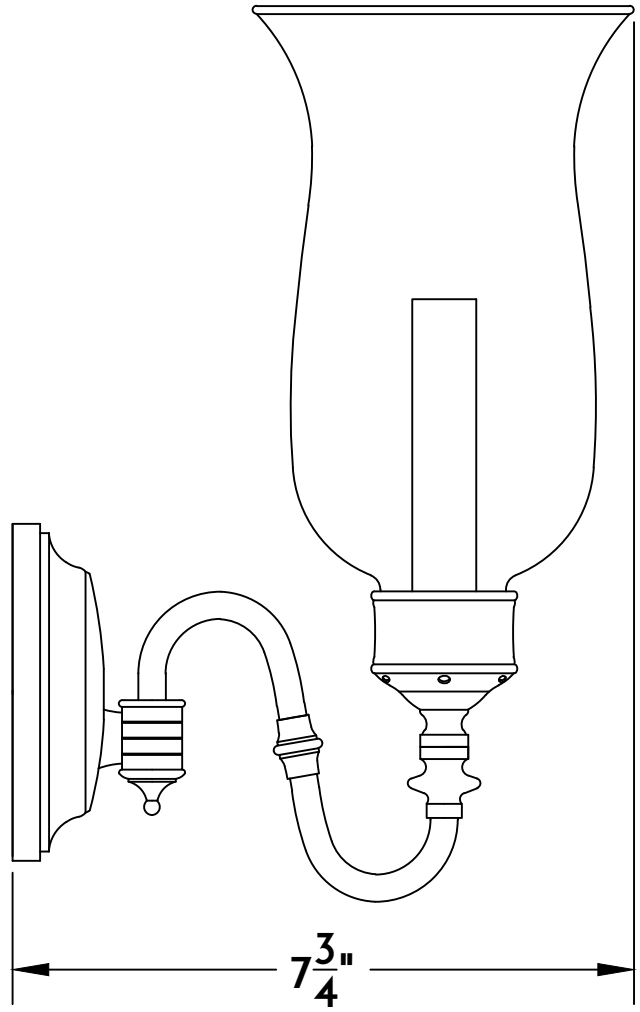

2 SCONCE SIDE ELE.

NOTE: Fixtures are hand made one at a time. There may be slight variations in measurement and tolerances when comparing to actual Cad drawing.

CONFIDENTIALITY STATEMENT. The information contained in this Drawing, including attachments, is confidential information property of Heritage Metalworks Ltd., Heritage Traditions, Scofield lighting and HMW Forge. The information is intended for use solely by the individual or entity named in the message and or email sent with. Any unauthorized review, printing, copying, reproduction or distribution of such information to other parties is prohibited. If you are not an intended recipient of this, please notify Heritage Metalworks Ltd. by reply e-mail and delete from your system.

HMW Heritage Traditions Lighting

Heritage Metalworks Ltd.

SCBS111 – Centrality Single Arm Sconce

Date: 10/10/2020
Date Rev:
Rev Remarks:
Drawn By: M.W.
Type: Shop Drawing

☐ Approved by:
☐ Approved As Noted:
☐ Revise & Resubmit
☐ Rejected